Spherical roller bearings, cylindrical and tapered bore

Principal dimensions			Basic load ratings		Speed ratings		Designation
			dynamic	static	Reference speed	Limiting speed	
d	D	B	C	C0			* SKF Explorer bearing
mm			kN		r/min		-
420	760	272	7677	11600	450	630	23284 CAK/W33 *

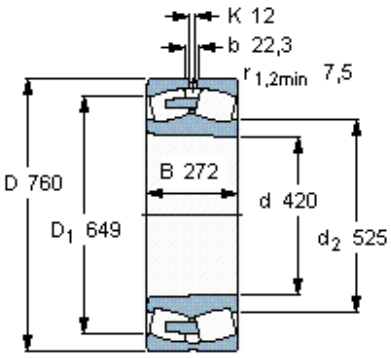

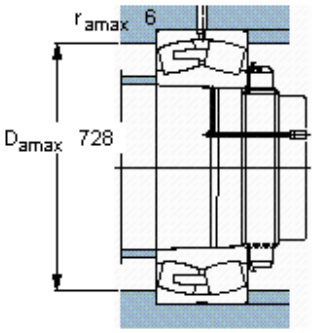

Tapered bore, taper
1: 12

Calculation factors

e 0,35
Y_1 1,9
Y_2 2,9
Y_0 1,8